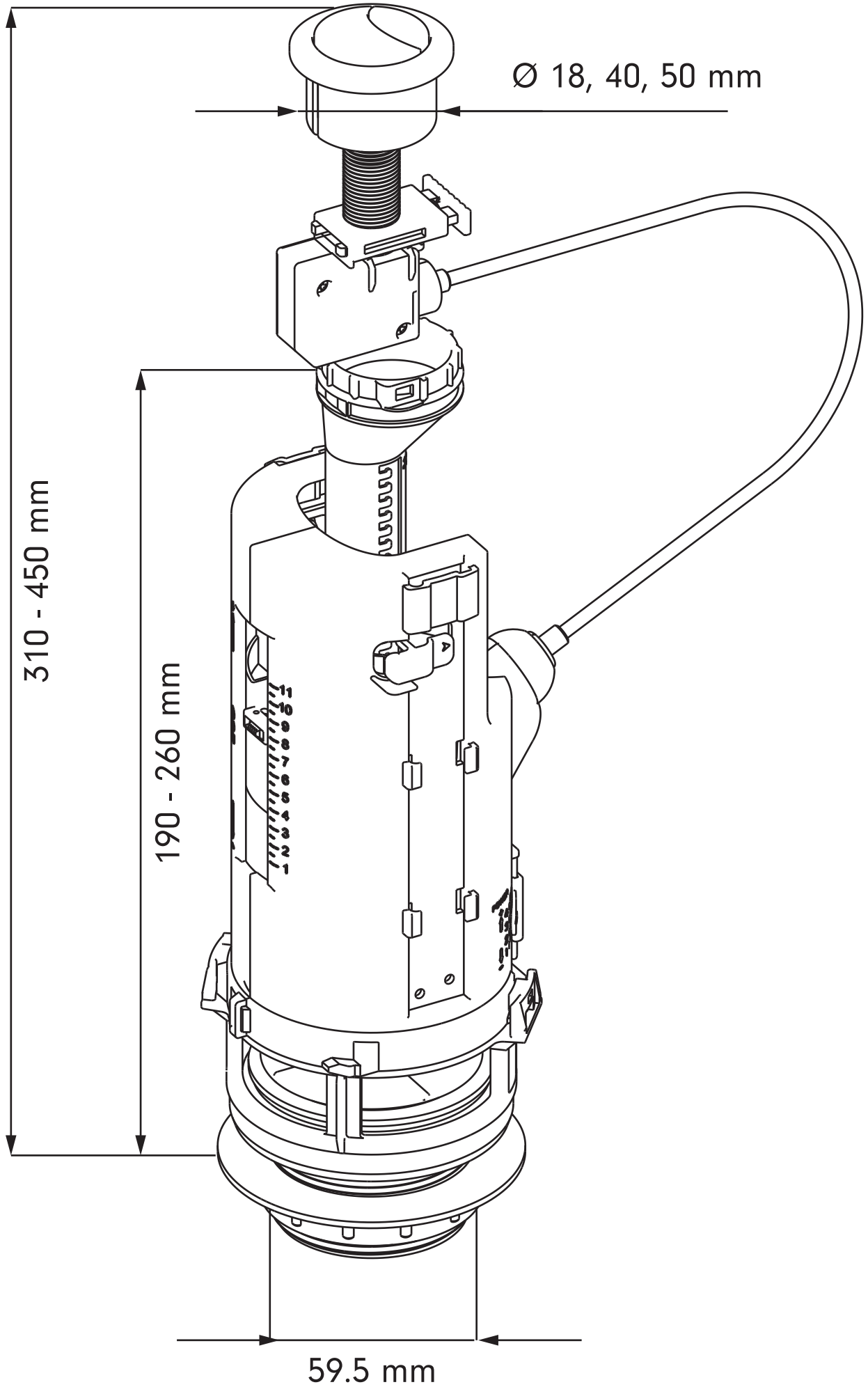
Ø 18, 40, 50 mm
310 - 450 mm
190 - 260 mm
59.5 mm